ADVANCED SCREEN SYSTEMS

1 BUILD™ BUILT IN. NOT ADDED ON.

Pre-hung Storm Door
DOOR ASSEMBLY INSTALLATION INSTRUCTIONS

If the Pre-Hung door arrives already attached to the jamb, move to step 3.

1 Unpack storm door

A. Cut and remove banding. Open the end of the box marked “Top” and remove the box marked **Door Shop Assembly Screws**, **Job Site Hardware,** and **Closer box.**

B. Remove the plastic bag covering the unit. Remove the snap covers. Remove the insect screen from the door.

2 Attach storm door to pre-hung entry door jamb

A. Place storm door unit on top of pre-hung entry door with the frame flanges in between the pre-hung jambs.

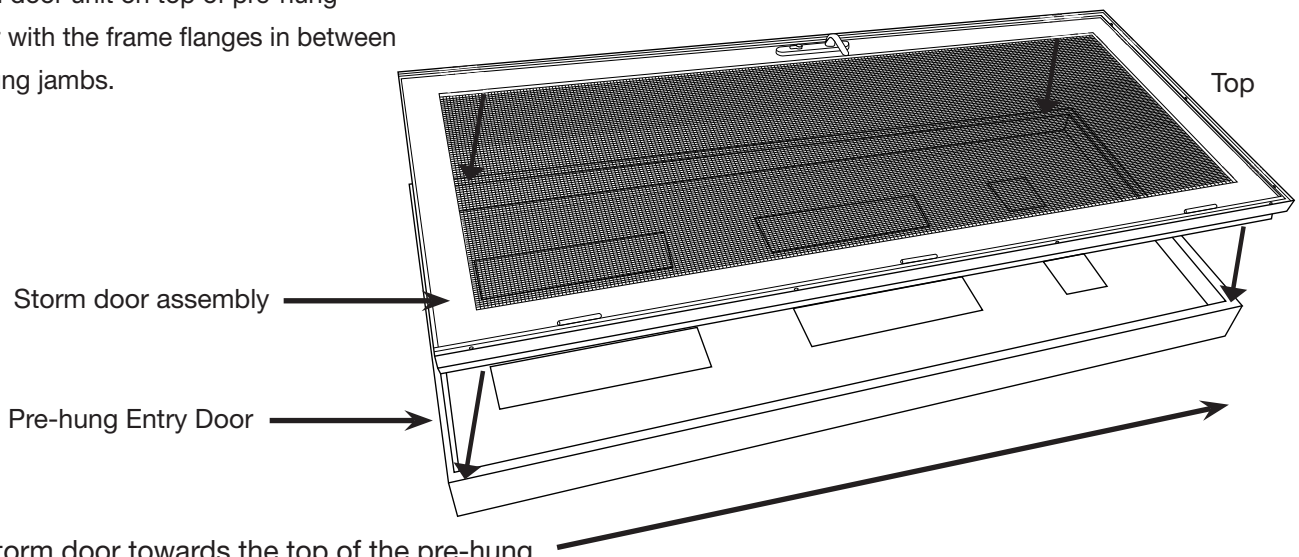

B. Push the storm door towards the top of the pre-hung entry door until it makes contact with the header.

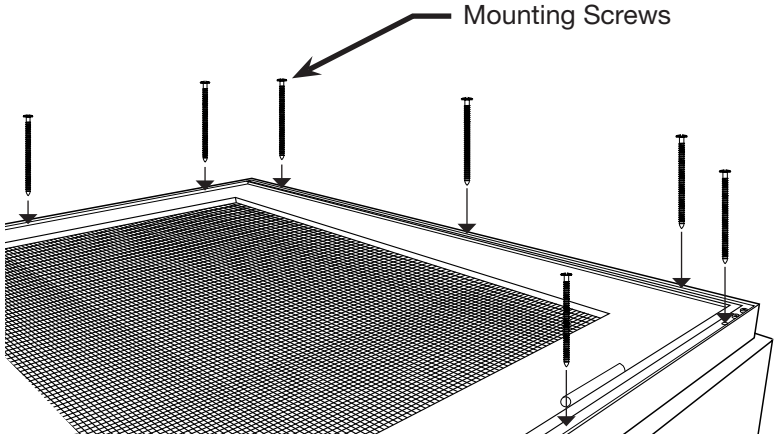

C. Using #8x1.75" bronze T20 screws (11) provided in hardware box labeled **Door Shop Assembly Screws,** attach the storm door unit to the entry door jambs.

3 Remove shipping clips

A. Remove the four screws from the center of the shipping clips.

B. Using the storm door handle with the square spindle or a large blade screwdriver, insert into the square hole and turn counter-clockwise until the latch retracts from the jamb.

C. Lift the panel away from the jamb to expose the four shipping clips.

D. Twist each shipping clip a quarter turn counter-clockwise to remove.

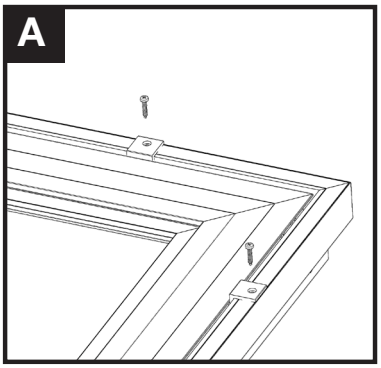

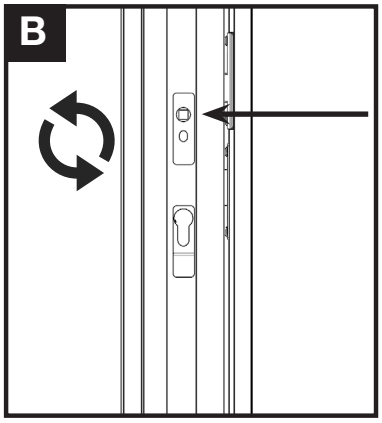

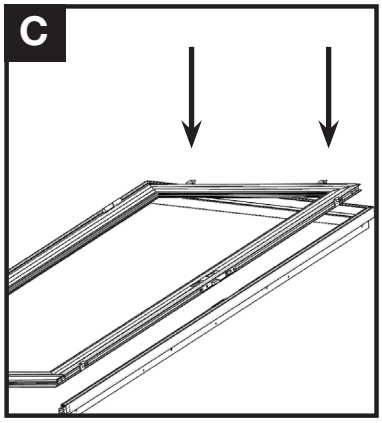

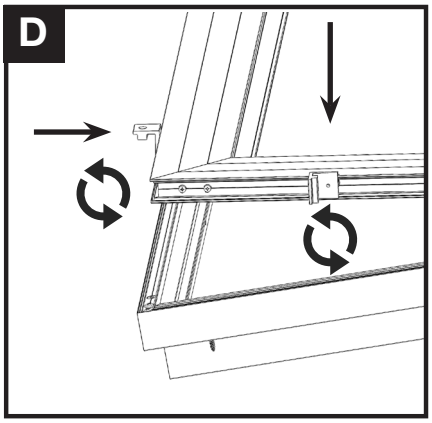

4 Install pre-hung entry door

Prior to installing the pre-hung entry door, remove the storm door panel by opening it and lifting up to slide it off the slip hinges. Make sure two washers remain on hinge pin when removing door.

WARNING: GLASS PANEL IS HEAVY

Once the entry door is installed plumb and level and operating properly, re-hang the storm door panel on the slip hinges, starting with the top hinge, which features a slightly longer pin.

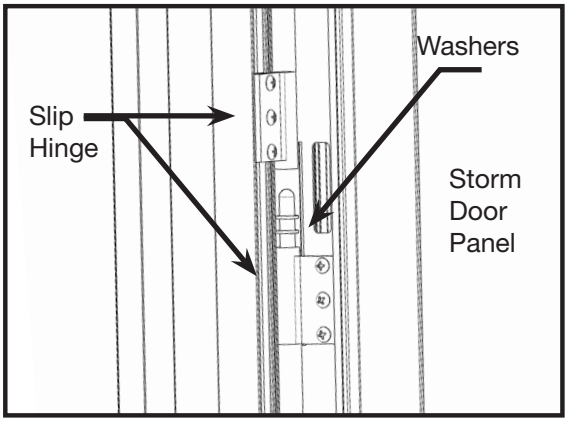

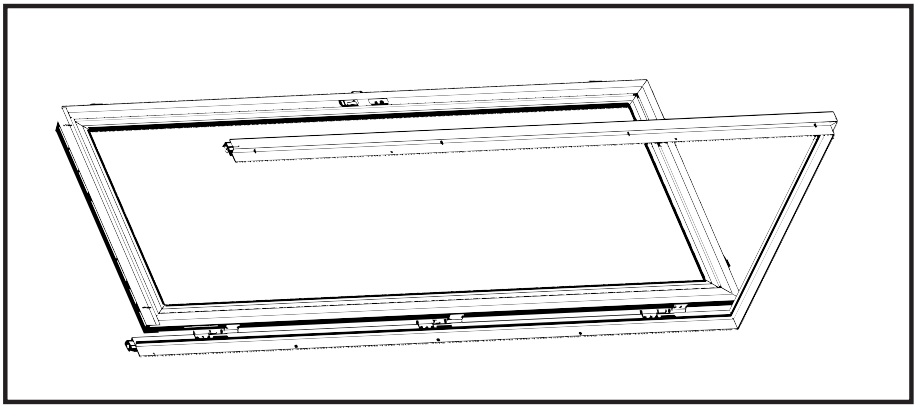

5 Install the handle and lockset

A. Start on the **interior** side of the door. With the handle facing toward the screen, insert the spindle and mounting screws through the mortise gear in the door panel.

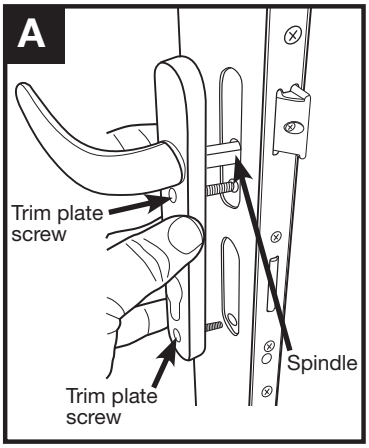

B. On the **exterior** of the door with the handle pointing toward the screen insert, align the openings on the inside of the handle with the spindle and mounting screws. Position the handle against door frame.

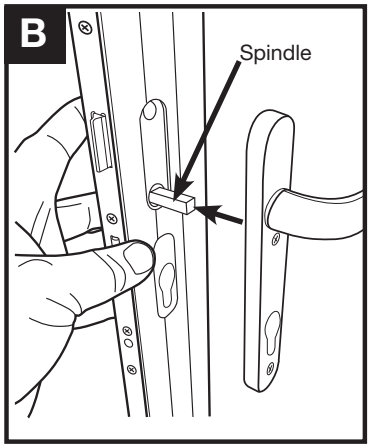

C. While holding both handle trim plates in place, tighten the mounting screws and then back off 2 turns. These screws will be tightened after the lock cylinder is installed.

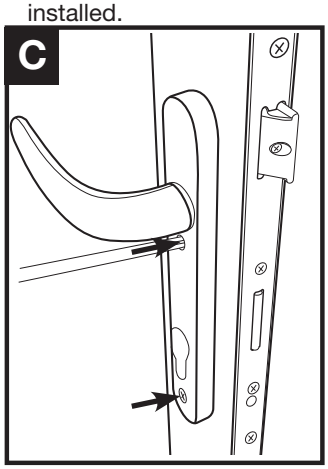

D. From the **inside** of the door, insert the lock cylinder into the door through the trim plate. Using a Phillips-head screw driver, tighten the flat-head bolt until snug. Do **NOT** over-tighten. Tighten the two handle mounting screws until snug.

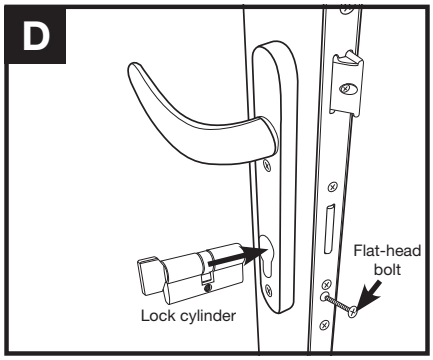

For duplication and rekeying purposes, the lock cylinder provided uses a Kwikset® keyway.

"Kwikset" is a registered trademark of Newfry LLC.

6 Test the locking mechanism

Verify that the locking mechanism opens, closes and locks properly. To test, pull down on the door handle to open the door. Then turn the thumb-turn on the inside of the door clockwise or turn the key counterclockwise to lock the deadbolt.

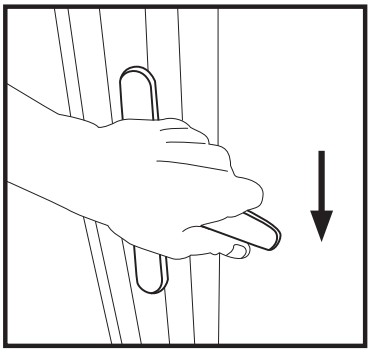

7 Install the final installation screws

Install the provided installation screws in the specified hole locations. Take care not to over tighten the screws.

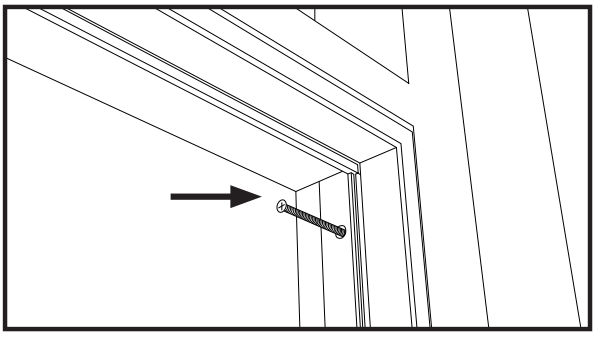

8 Storm door closer instructions

NOTE: BEFORE INSTALLATION, CHECK DOOR TO SEE THAT IT CLOSES AND LATCHES FREELY

Closer may be installed on rail at top of door.

WARNING:
BEFORE locating door bracket, be sure that lugs on rod are resting against “Hold-Open Washer”. This will give proper tension setting for closer.
AFTER completed installation, move “Hold-Open Washer back of lugs on rod.

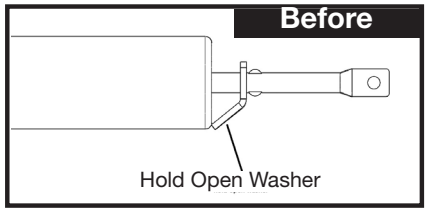

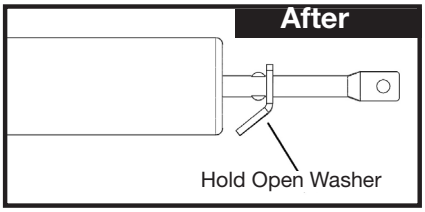

A. Face the arrow on the bracket toward the storm door. Align the back of the closer bracket so it is flush with the storm door frame. Move the bracket down a minimum of 3/4” and mark the location of the screw holes

B. Drill four 3/32” diameter pilot holes and fasten bracket with 4 long screws as shown. Using short pin and retaining cap, connect closer rod to bracket.
The closer is set at the correct tension for installation with “Hold-Open Washer” held against closer tube by lugs on rod. DO NOT CHANGE UNTIL INSTALLATION IS COMPLETE.

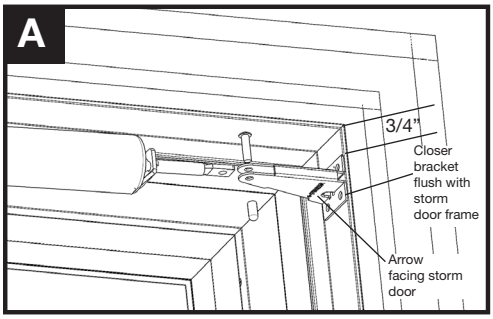

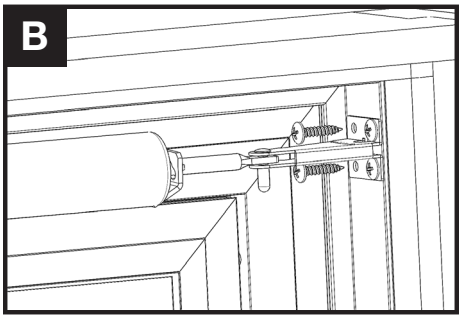

C. Attach door bracket to closer with long pin and retaining cap in front hole as shown. With door tightly closed and latched, hold closer and door bracket in level position and mark center hole of each slot and drill two 3/32” diameter pilot holes.

D. Fasten to door with 2 short screws as shown. Closer is now ready to operate. Open door and move “Hold-Open Washer” back of lugs on rod. Closer speed is regulated by turning adjustment valve as directed on the label.

The closer is in a maximum latching power position (pin in front hole). If less latching power is required, hold door open about 8” with “Hold-Open Washer”, pull long pin and reconnect in rear hole.

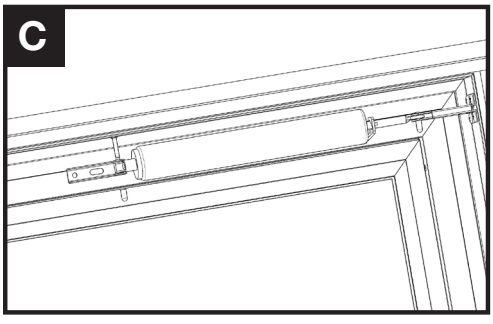

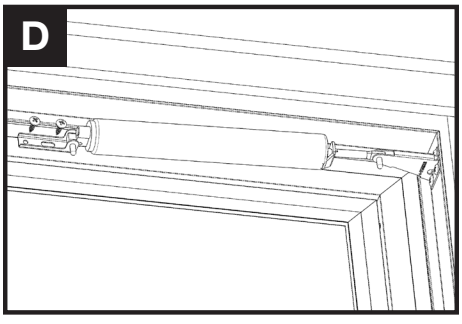

9 Install the snap covers

A. Place snap cover in header jamb as shown and, using a rubber mallet, strike along the edge of the snap cover to secure it in place.

B. Once snap cover is secured, hold a wood block over the length of the snap cover and hit with mallet to smooth any irregularities in the snap cover surface.

Repeat process for the hinge-side and lock-side snap covers.

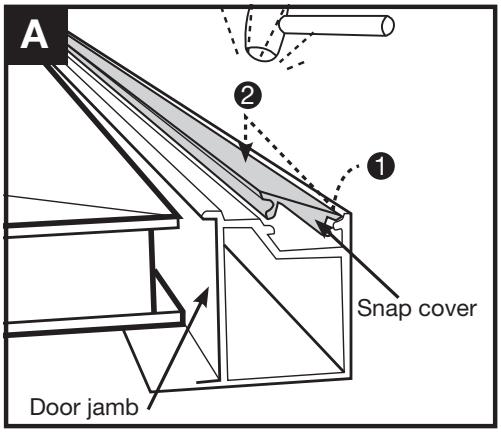

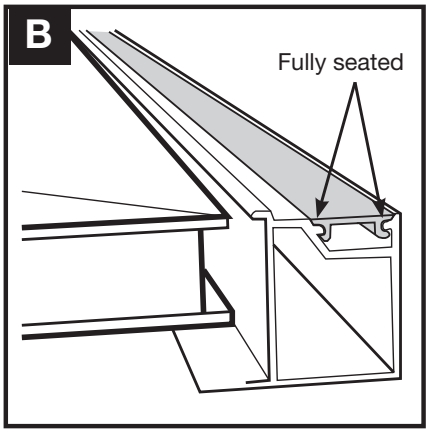

10 Removing glass or insect panel

WARNING: GLASS PANEL IS HEAVY

A. To remove the insert panel, open the door until the cam locks on the hinge side of the panel are exposed.

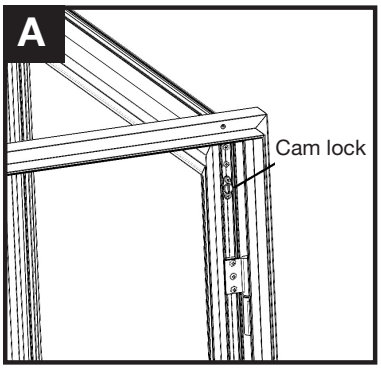

B. While supporting the panel from the inside, use a flat blade screwdriver to turn the cam lock counterclockwise a quarter turn till it pops out (it may be necessary to pull the cam lock).

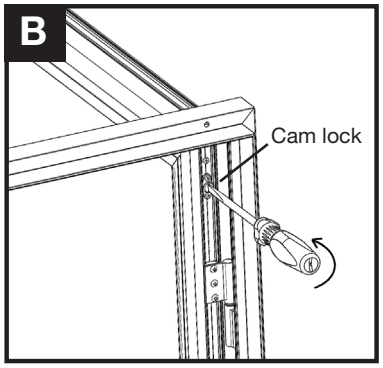

C. Repeat until all three cam locks are released.

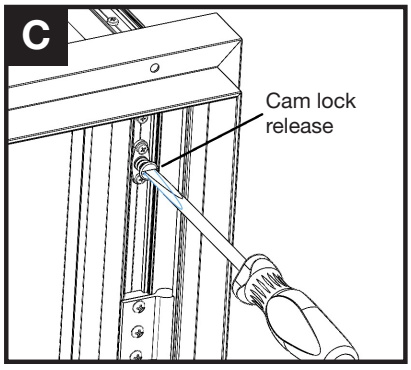

D. While holding the door, push the cam lock side of the panel toward the inside about an inch until it clears the frame.



E. Slide the panel away from the door handle until there is just enough room to grasp the other side of the panel. Remove the panel and store in a safe place.

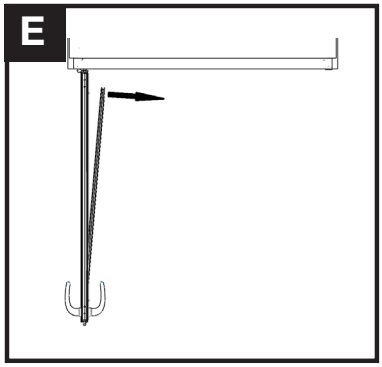

11 Reinserting glass panel

WARNING: GLASS PANEL IS HEAVY

A. To reinsert panel, place the panel on the bottom ledge in the frame and slide the panel toward the door handle until the frame engages the inner channel on the other side of the panel.

B. Swing the opposite end of the panel into the frame until it sits flat.

C. Using the flat blade screwdriver, push the three cam locks toward the panel and turn clockwise a quarter turn till it locks.

